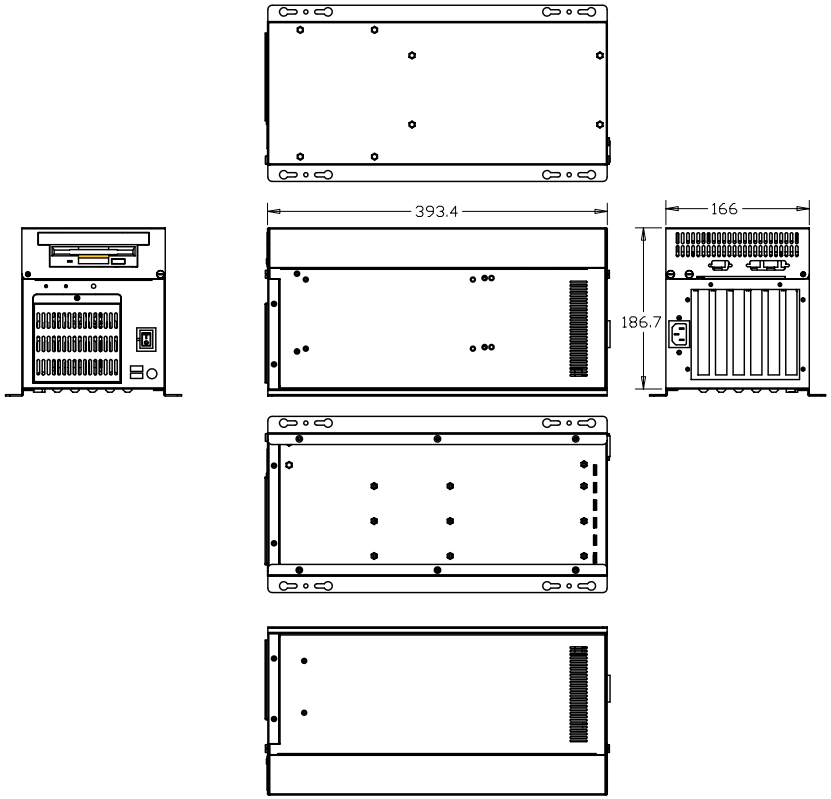

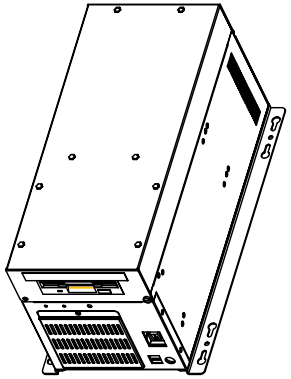

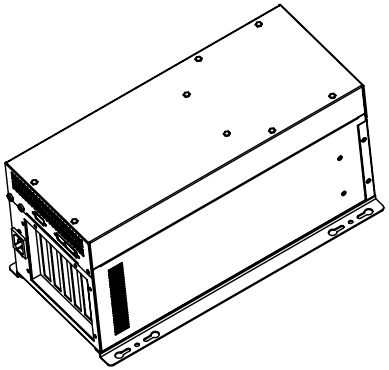

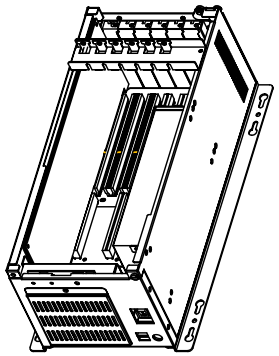

NOTE:
1. MATERIAL:
2. ALL BURRS MUST BE FILLETED OFF.
3. FINISH COATING (SPEC.SEE SAMPLE)
COLOR PANTONE 413C
4. TOLERANCE UNLESS OTHERWISE SPEC.
SEE TOLERANCE TABLE

TOL	< 30 : ±0.1 30 < 120 : ±0.15 120 < 315 : ±0.2 315 < : ±0.3 ANGLE TOL: ±0.5°	UNIT : mm 3RD ANGLE	FINISHING MATERIAL	PART NO.	Ver.A
				MOLD NO.	Q'ty
			APPROVED	TITLE	KCH-316-ASSY-
			CHECKED		
			DESIGNED	DRAWING NO.	KCH-316-ASSY-
			DRAWN	SIZE A1	SCALE 1:3.33 SHEET 1 OF 1

ANNSO
www.annso.com

MARK	DESCRIPTION	SING	DATE
△			
△			
△			