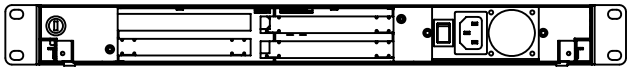

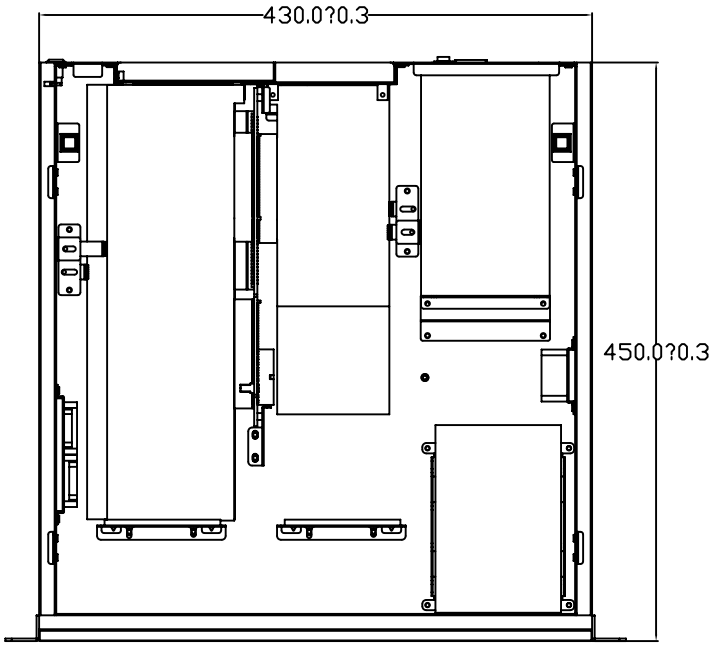

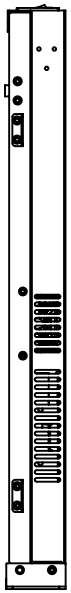

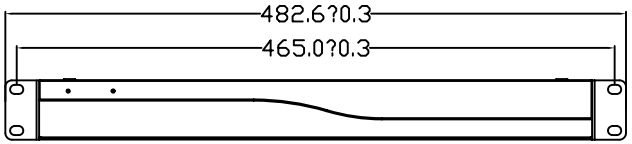

KCH-1008P-3D3V

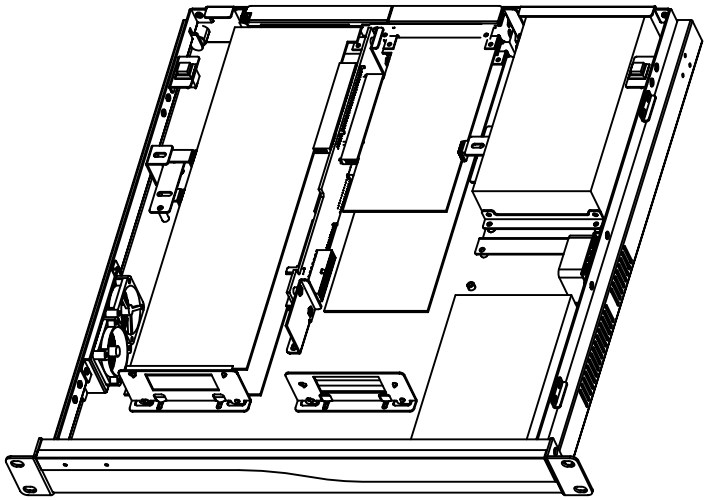

MARK	DESCRIPTION	SING	DATE
△			
△			
△			

NOTE
1. MATERIAL:
2. ALL BURRS MUST BE FILLERED TO <0.0mm
3. FINISH [illegible]
4. [illegible]

TOL.	1 DIG : ±0.1	UNIT : mm	FINISHING
	DIG 1 DIG : ±0.05		MATERIAL
	DIG 2 DIG : ±0.0	DO NOT SCALE	APPROVED
	DIG 3 DIG : ±0.0		CHECKED
	ANGLE TOL. : ±0.5°		DESIGNED
			DRAWN

RANSO TECHNOLOGIES

PART NO.	Ver A3
MOLD NO.	KCH-1008P Ev
TITLE	KCH-1008P-3D3V
DRAWING NO.	△
SIZE A3	SCALE / SHEET 1/