NOTE:	
1.	ALL BURRS MUST BE FILLTED TO <0.0 5mm
2.	FINISH: COATING (SPEC. SEE SAMPLE)
3.	TOLERANCE UNLESS OTHERWISE SPEC. SEE TOLERANCE TABLE

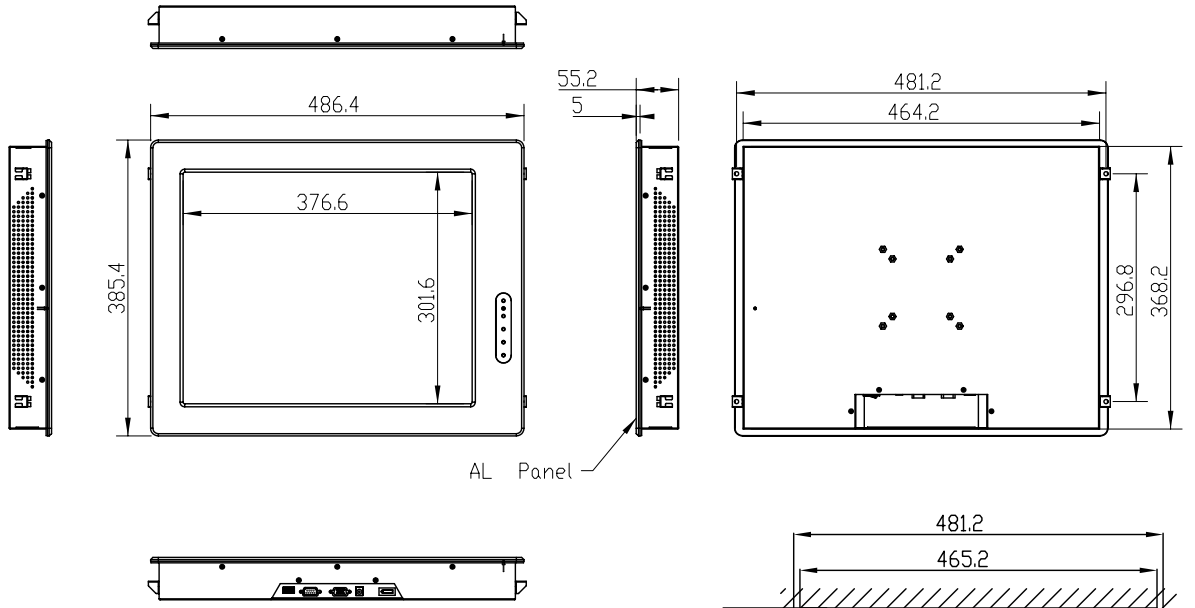

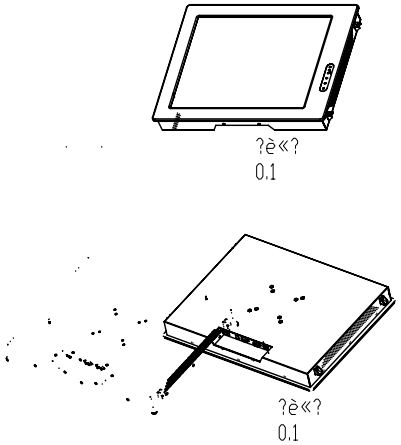

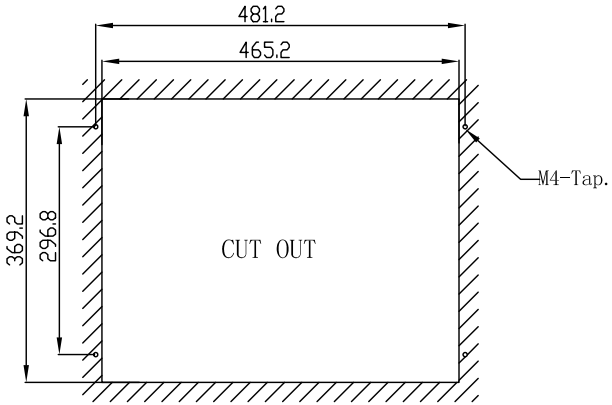

M4 TAP. are just only for front mount

TOL			
	< 30	:	±0.1
	30 < 120	:	±0.15
	120 < 315	:	±0.2
	315 <	:	±0.3
	ANGLE TOL	:	±0.5°

UNIT : mm	FINISHING			MOLD Name.		Ver.	
3RD ANGLE'S	MATERIAL			MOLD NO.	IPM-19	Q'ty	
	APPROVED			PART NO.			
	CHECKED			TITLE.	IPM-19-ASSY		
	DESIGNED	SJL	06.28	DRAWING NO.	IPM-19-303V		△
	DRAWN	SJL	06.28	SIZE A4	SCALE 0.2	SHEET: 1 OF 1	

ANNSO
www.annso.com

MARK	DESCRIPTION	SING	DATE
△			
△			
△			