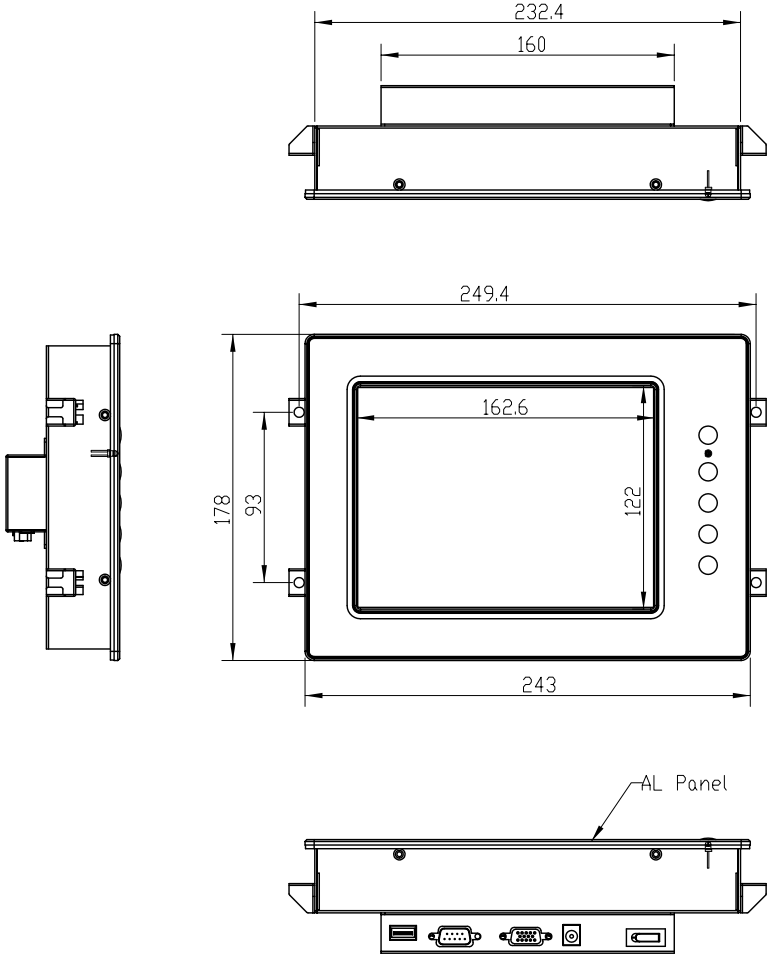

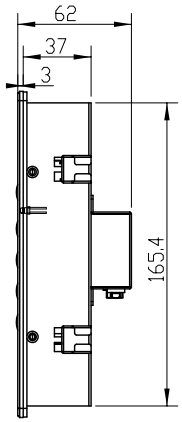

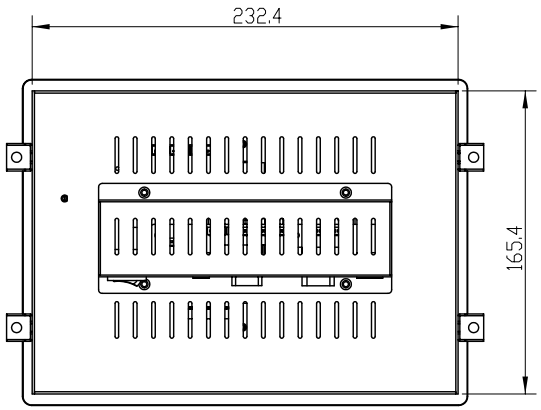

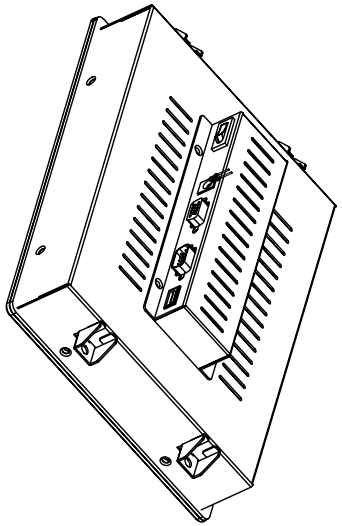

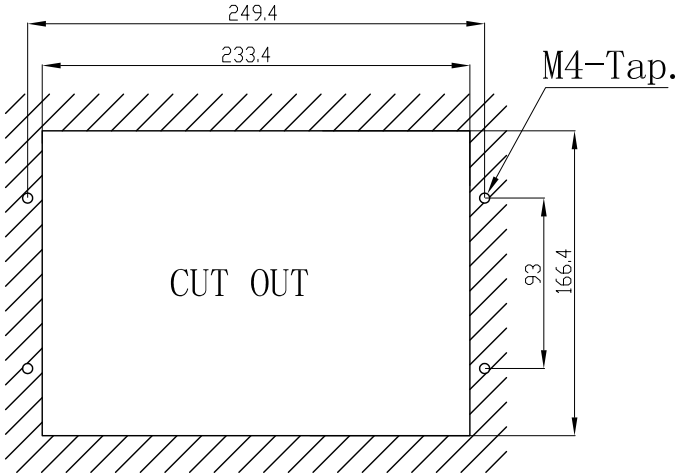

M4 TAP.are just only for front mount

NOTE:
1: MATERIAL:
2: ALL BURRS MUST BE FILLETED TO <0.05 mm
3: FINISH: COATING (SPEC. SEE SAMPLE)
COLOR PANTONE 413C
4: TOLREANCE UNLESS OTHERWISE SPEC.
SEE TOLERANCE TABLE

MARK	DESCRIPTION	SING	DATE
△			
△			
△			

TOL	< 30 : ±0.1 30 < 120 : ±0.15 120 < 315 : ±0.2 315 < : ±0.3 ANGLE TOL : ±0.5°	UNIT : mm	FINISHING			PART NO.		Ver.	
		3RD ANGLE'S	MATERIAL			MOLD NO.	IPM-08	Q'ty	
			APPROVED		. .	TITLE	IPM-08-Assy		
			CHECKED		. .				
			DESIGNED	SJL	06.2.8	DRAWING NO.	IPM-08-3D3V .DWG		△
			DRAWN	SJL	06.2.8	SIZE A2	SCALE 0.5	SHEET: 1 OF 1	

ANNSO
www.annso.com