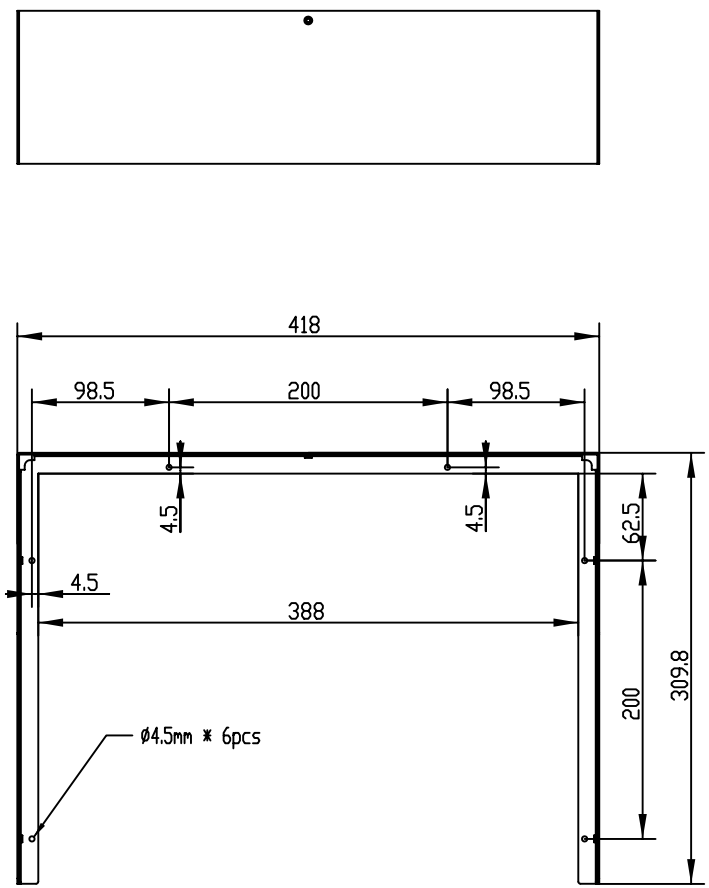

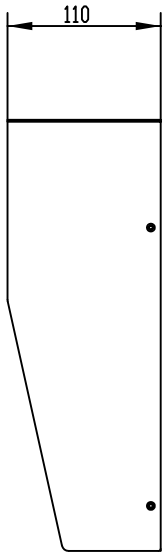

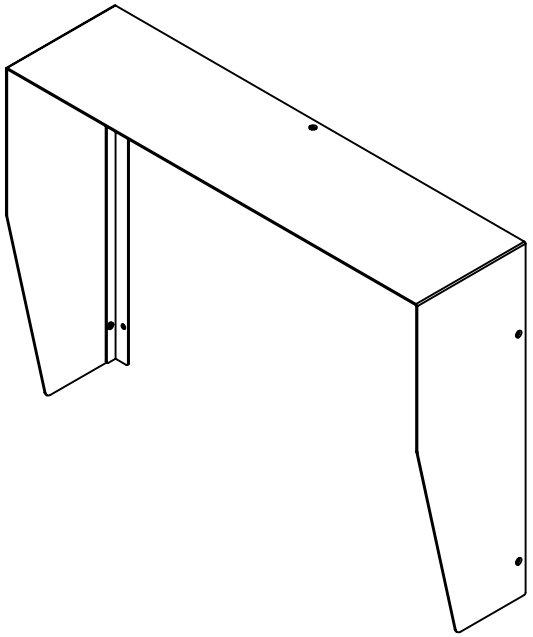

ISOMETRIC VIEW

NOTE:

1. MATERIAL:
2. ALL BURRS MUST BE FILLTED TO <0.05mm
3. FINISH: COATING (SPEC. SEE SAMPLE)
4. TOLERANCE UNLESS OTHERWISE SPEC. SEE TOLERANCE TABLE

MARK	DESCRIPTION	SING	DATE
△			
△			
△			

TOL			
	< 30	:	±0.1
	30 < 120	:	±0.15
	120 < 315	:	±0.2
	315 <	:	±0.3
	ANGLE TOL	:	±0.5°

UNIT : mm

3RD ANGLE'S

ANNSO www.annso.com

FINISHING			PART NO.	Ver.	A0
MATERIAL			MOLD NO. MBPC-17	Q'ty	1
APPROVED			TITLE	SUN-VISOR	
CHECKED					
DESIGNED	LiuChunhua	2010-01-21	DRAWING NO.	SUN-VISOR	△
DRAWN			SIZE A3	SCALE 4:15	SHEET: OF