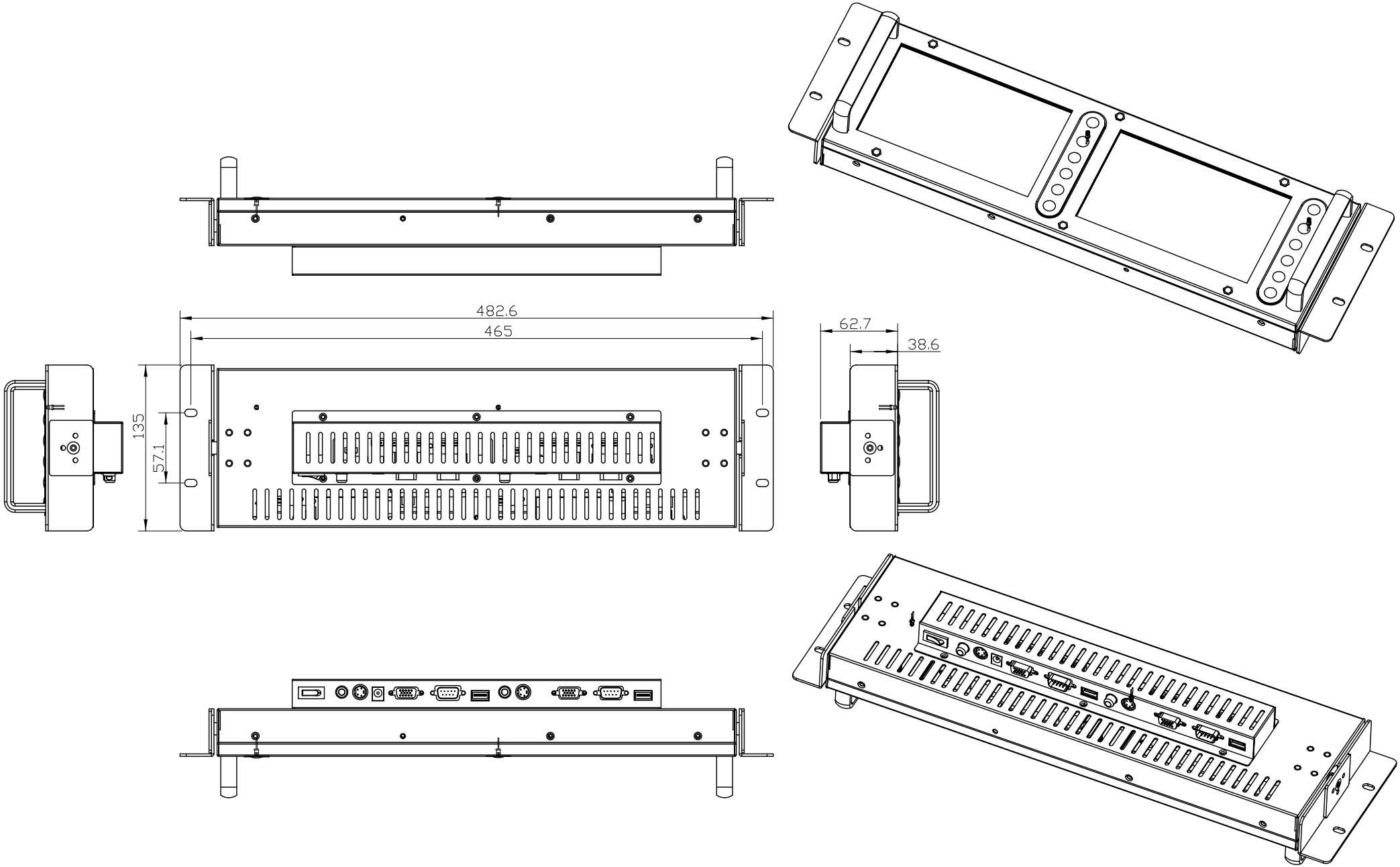

NOTE:
1. MATERIAL:
2. ALL BURRS MUST BE FILLETED 0.5 MAX
3. FINISH: COATING (SPEC. SEE SAMPLE
COLOR PANTONE 413C
4. TOLREANCE UNLESS OTHERWISE SPEC.
SEE TOLERANCE TABLE

TOL			
	< 30	±	±0.1
	30 < 120	±	±0.15
	120 < 315	±	±0.2
	315 <	±	±0.3
	ANGLE TOL	±	±0.5°

UNIT : mm	FINISHING	PART NO.	Ver. A
3RD ANGLE	MATERIAL	MOLD NO.	Q'ty
	APPROVED	TITLE	RM-2X-7
	CHECKED		
	DESIGNED	DRAWING NO.	3D3V.DWG
	DRAWN	SIZE A2 SCALE 1:5	SHEET 1 OF 1

ANNSO
www.annso.com

MARK	DESCRIPTION	SING	DATE
△			
△			
△			