FRONT VIEW

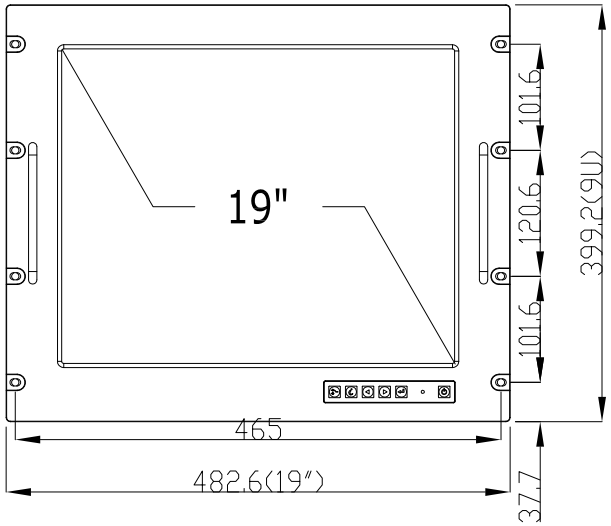

SIDE VIEW

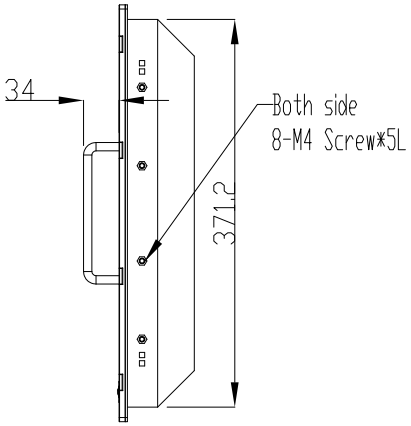

BACK VIEW

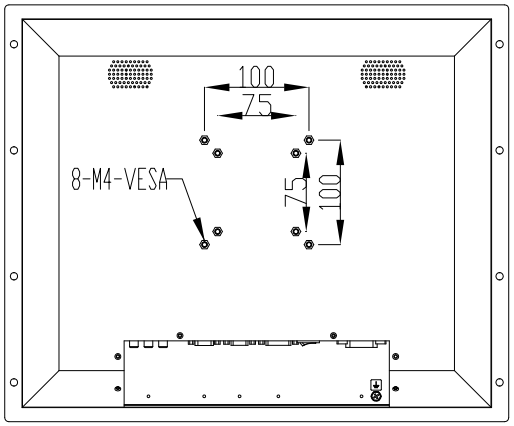

TOP VIEW

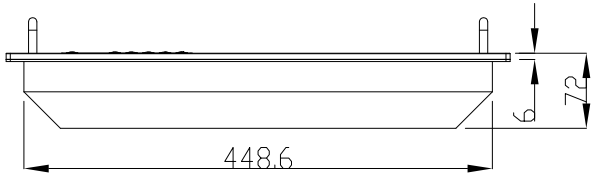

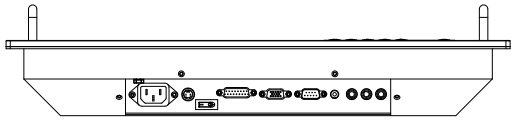

ISOMETRIC VIEW

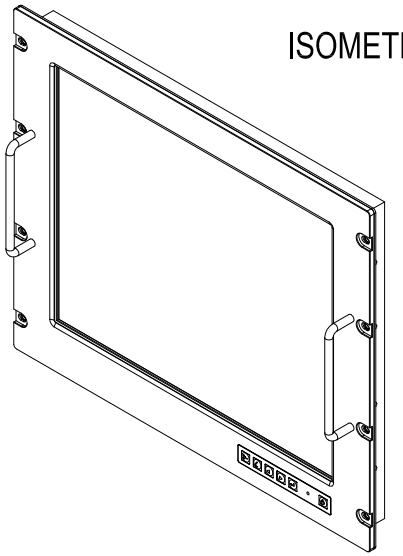

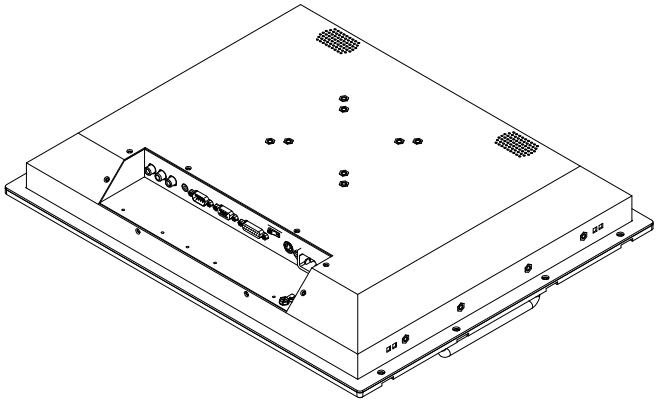

NOTE:

1. MATERIAL:
2. ALL BURRS MUST BE FILLTED TO <0.05mm
3. FINISH: COATING (SPEC. SEE SAMPLE)
4. TOLERANCE UNLESS OTHERWISE SPEC. SEE TOLERANCE TABLE

MARK	DESCRIPTION	SING	DATE
△			
△			
△			

TOL					
	< 30	:	±0.1	UNIT : mm	
	30 < 120	:	±0.15	3RD ANGLE'S	
	120 < 315	:	±0.2		
	315 <	:	±0.3		
	ANGLE TOL	:	±0.5°		

FINISHING			PART NO.		Ver.	A0
MATERIAL			MOLD NO.	RGRM-19	Q'ty	1
APPROVED		. .	TITLE	RGRM-19-3D3V		
CHECKED		. .				
DESIGNED	LiuChunhua	2010-08-26	DRAWING NO.			△
DRAWN		. .	SIZE A3	SCALE 0.2	SHEET:	OF

ANNSO
www.annso.com