FRONT VIEW

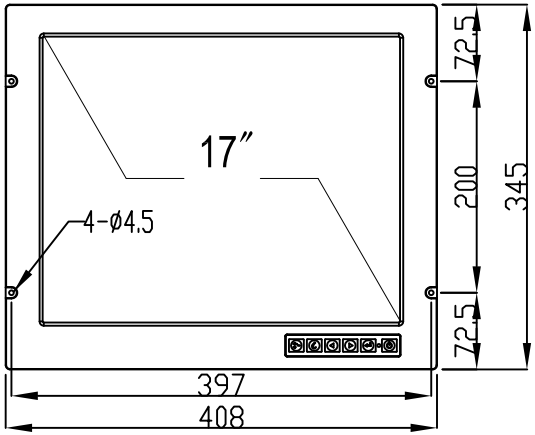

SIDE VIEW

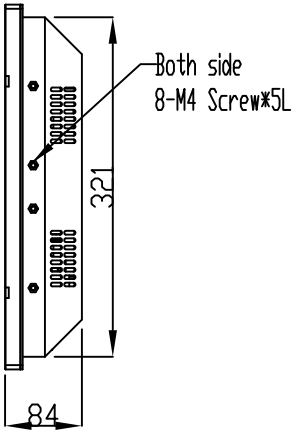

BACK VIEW

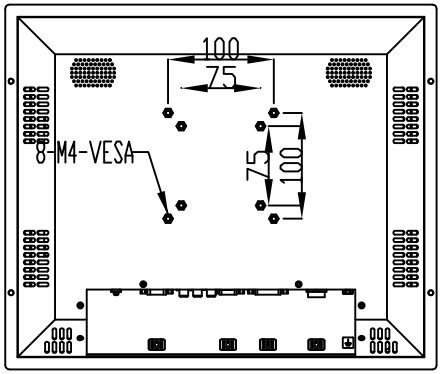

BOTTOM VIEW

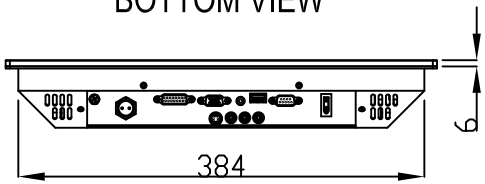

TOP VIEW

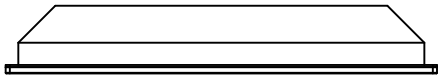

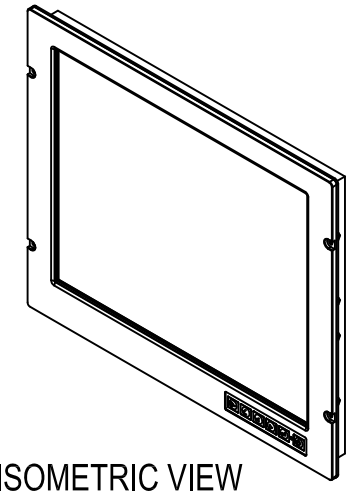

ISOMETRIC VIEW

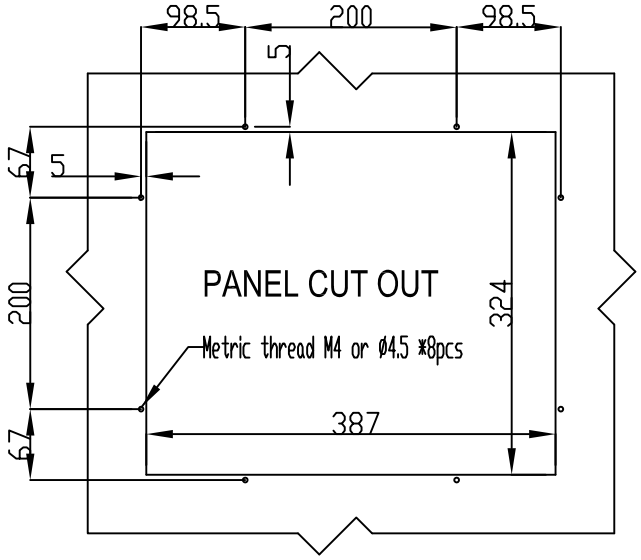

NOTE:

1. MATERIAL:
2. ALL BURRS MUST BE FILLTED TO <0.05mm
3. FINISH: COATING (SPEC. SEE SAMPLE)
4. TOLERANCE UNLESS OTHERWISE SPEC. SEE TOLERANCE TABLE

TOL			
	< 30	:	±0.1
	30 < 120	:	±0.15
	120 < 315	:	±0.2
	315 <	:	±0.3
	ANGLE TOL	:	±0.5°

UNIT : mm	FINISHING			PART NO.	Ver. A0
3RD ANGLE'S	MATERIAL			MOLD NO. MBPM-17	Q'ty
	APPROVED		. .	TITLE	MBPM-17-ASSY
	CHECKED		. .		
	DESIGNED	LiuChunhua	2009-12-18	DRAWING NO.	MBPM-17-ASSY.DWG
	DRAWN		. .	SIZE A3	SCALE 0.2 SHEET: OF

ANNSO
www.annso.com

MARK	DESCRIPTION	SING	DATE
△			
△			
△			

1 2 3 4 5 6 7 8

A B C D E F