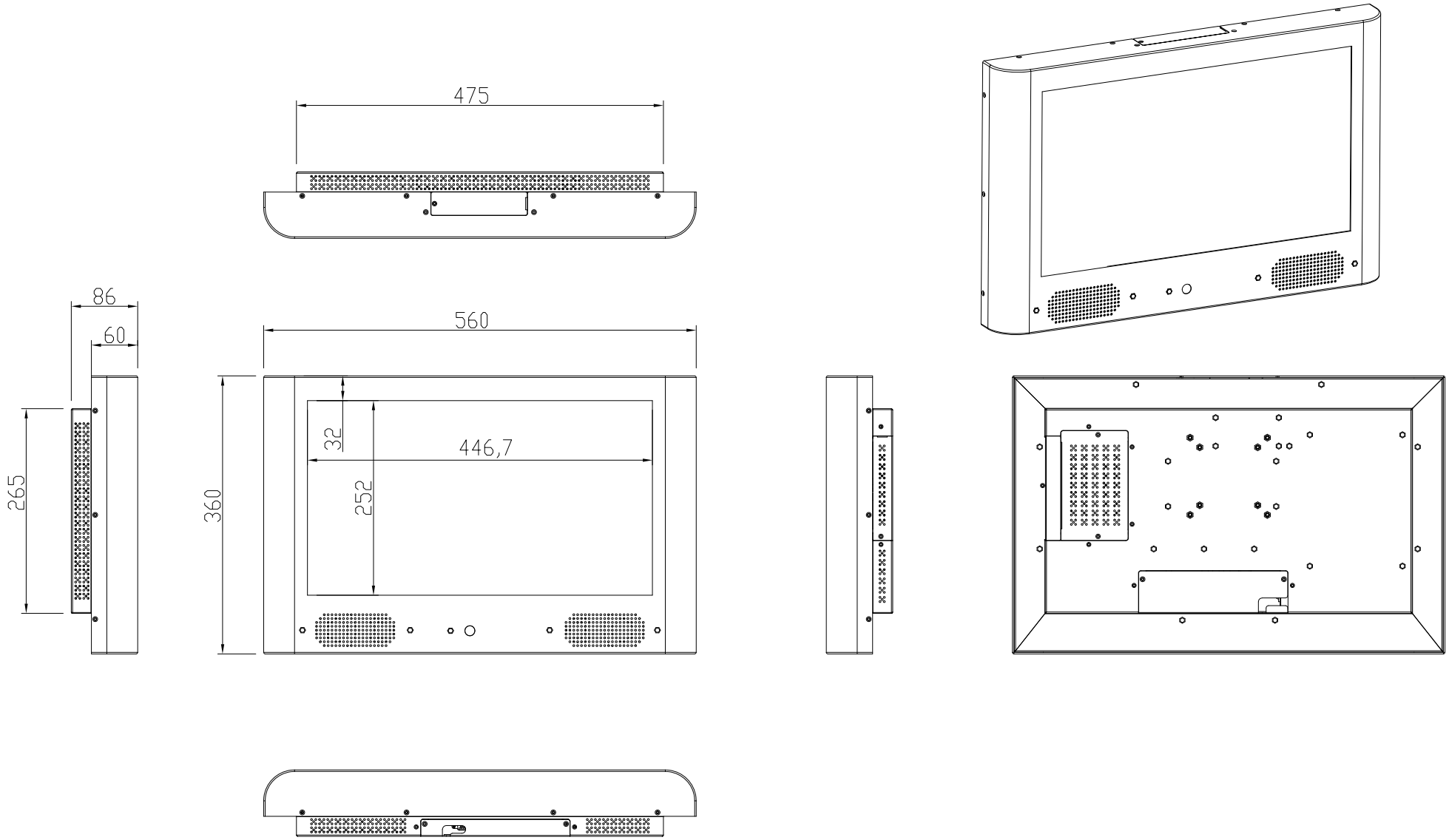

注意：

1. 所有工件必须倒毛刺 去接刀痕。
2. 所有线性尺寸按GB1804-M级。
3. Finish:Coating(Spec.See Sample)

MARK	DESCRIPTION	SING	DATE
△			
△			
△			

TOL			
	< 30	:	±0.1
	30 < 120	:	±0.15
	120 < 315	:	±0.2
	315 <	:	±0.3
	ANGLE TOL	:	±0.5°

UNIT : mm	FINISHING	SILVER	PART NO.		Ver.	A0
3RD ANGLE'S	MATERIAL	AL/SGCC	MOLD NO.	DMP-202W	Q'ty	1
	APPROVED			TITLE	DMP-202W	
	CHECKED					
	DESIGNED	Jack	19-Dec-07	DRAWING NO.	DMP-202W-3D3V.DWG	△
	DRAWN	Jack		SIZE A3	SCALE 0.2	SHEET: 1 OF 1

ANNSO
www.annso.com